Chapter 7: Computer Networks, the Internet, and the World Wide Web

Slides From: Invitation to Computer Science, Fourth Edition

Objectives

In this chapter, you will learn about

- Basic networking concepts
- Communication protocols
- Network services and benefits
- A brief history of the Internet and the World Wide Web

Introduction

- Computer network
  - Computers connected together
  - Purpose: Exchanging resources and information
  - Just about any kind of information can be sent
    - Examples: Television and radio signals, voice, graphics, handwriting, photographs, movies

Basic Networking Concepts

- Computer network
  - Set of independent computer systems connected by telecommunication links
  - Purpose: Sharing information and resources
- **Nodes**, **hosts**, or **end systems**
  - Individual computers on a network

Communication Links

- Switched, dial-up telephone line
  - A circuit is temporarily established between the caller and callee
  - Analog medium
  - Requires modem at both ends to transmit information produced by a computer
    - Computer produces digital information

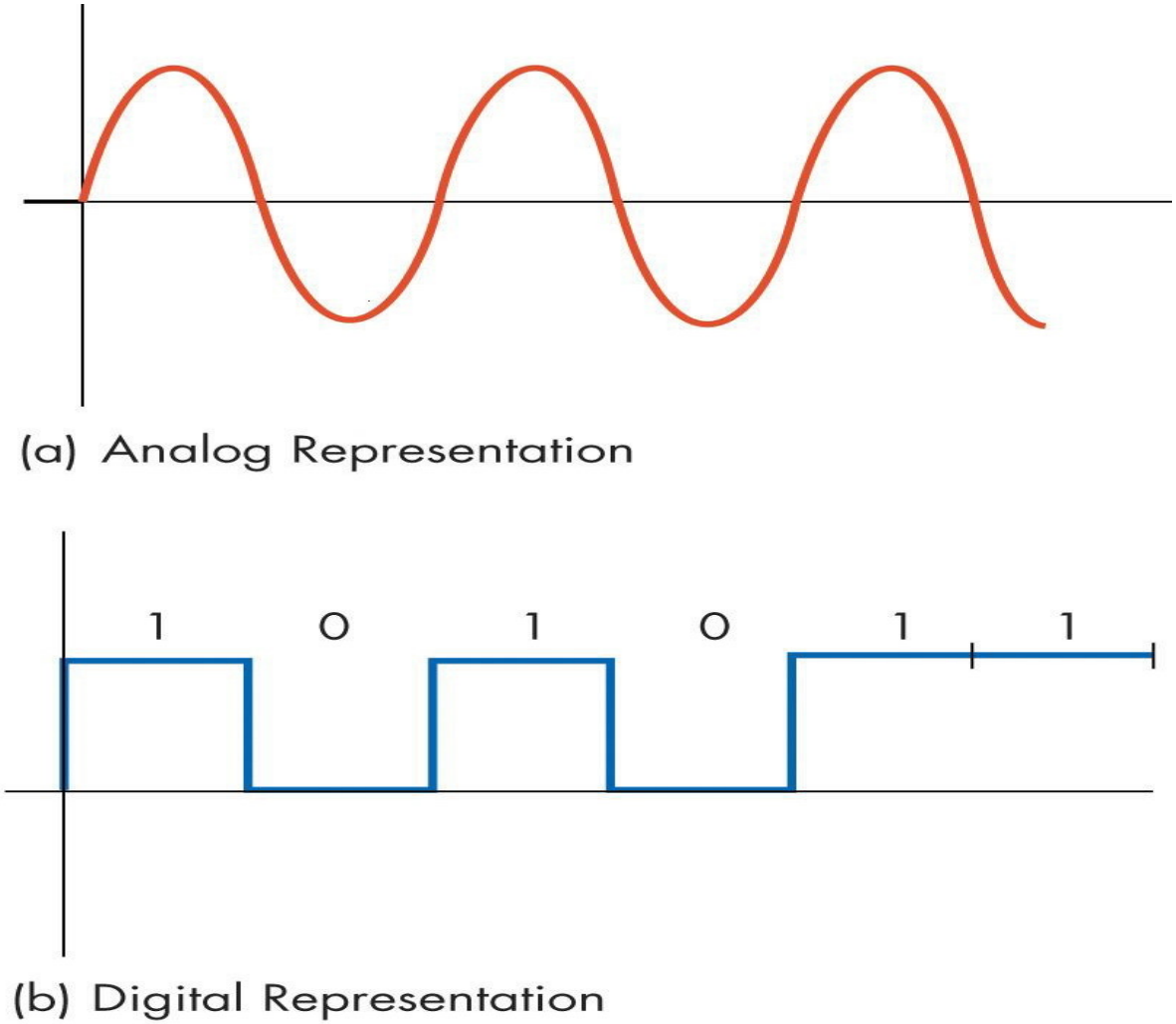

Figure 7.1 Two Forms of Information Representation

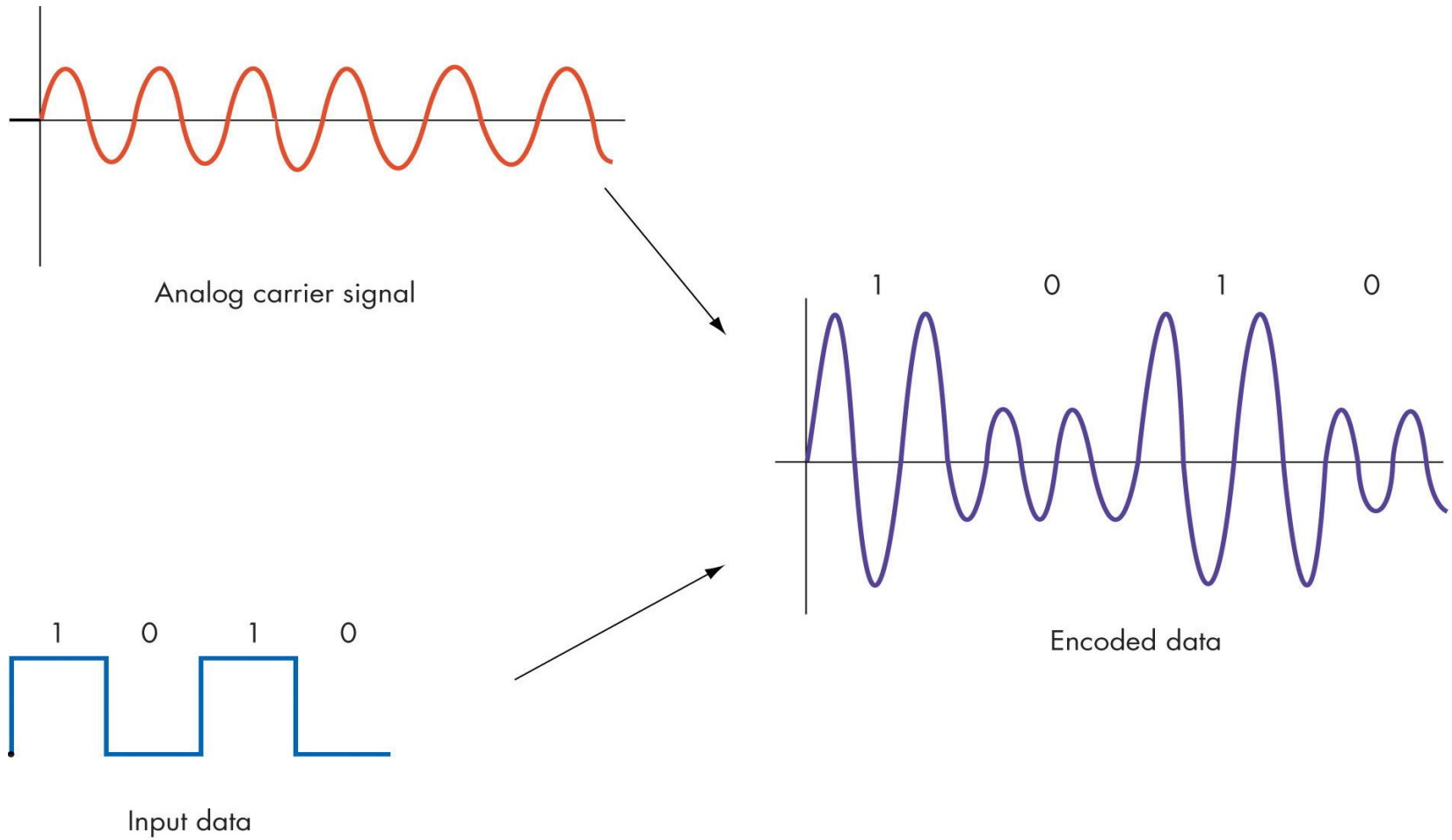

Figure 7.2

Modulation of a Carrier to Encode Binary Information

Communication Links (continued)

- Dial-up phone links
  - Transmission rate: 56,000 bps (56 Kbps)
- Broadband
  - Transmission rate: Exceeding 256,000 bps (256 Kbps)

Communication Links (continued)

- Options for broadband communications
  - Home use
    - Digital subscriber line (DSL)
    - Cable modem
  - Commercial and office environment
    - Ethernet
    - Fast Ethernet
    - Gigabit Ethernet

Line Type	Speed	Time to Transmit 8 Million Bits (One Compressed Image)
Dial-up phone line	56 Kbps	2.4 minutes
DSL line, cable modem	2 Mbps	4 seconds
Ethernet	10 Mbps	0.8 second
Fast Ethernet	100 Mbps	0.08 second
Gigabit Ethernet	1 Gbps	0.008 second

Figure 7.3

Transmission Time of an Image at Different Transmission Speeds

Communication Links (continued)

- Wireless data communication
  - Uses radio, microwave, and infrared signals
  - Enables “mobile computing”
  - Types of wireless data communication
    - Wireless local access network
    - Wireless wide-area access network

Local Area Networks

- Local area network (LAN)
  - Connects hardware devices that are in close proximity
  - The owner of the devices is also the owner of the means of communications
  - Common wired LAN topologies
    - Bus
    - Ring
    - Star

Figure 7.4

Some Common LAN Topologies

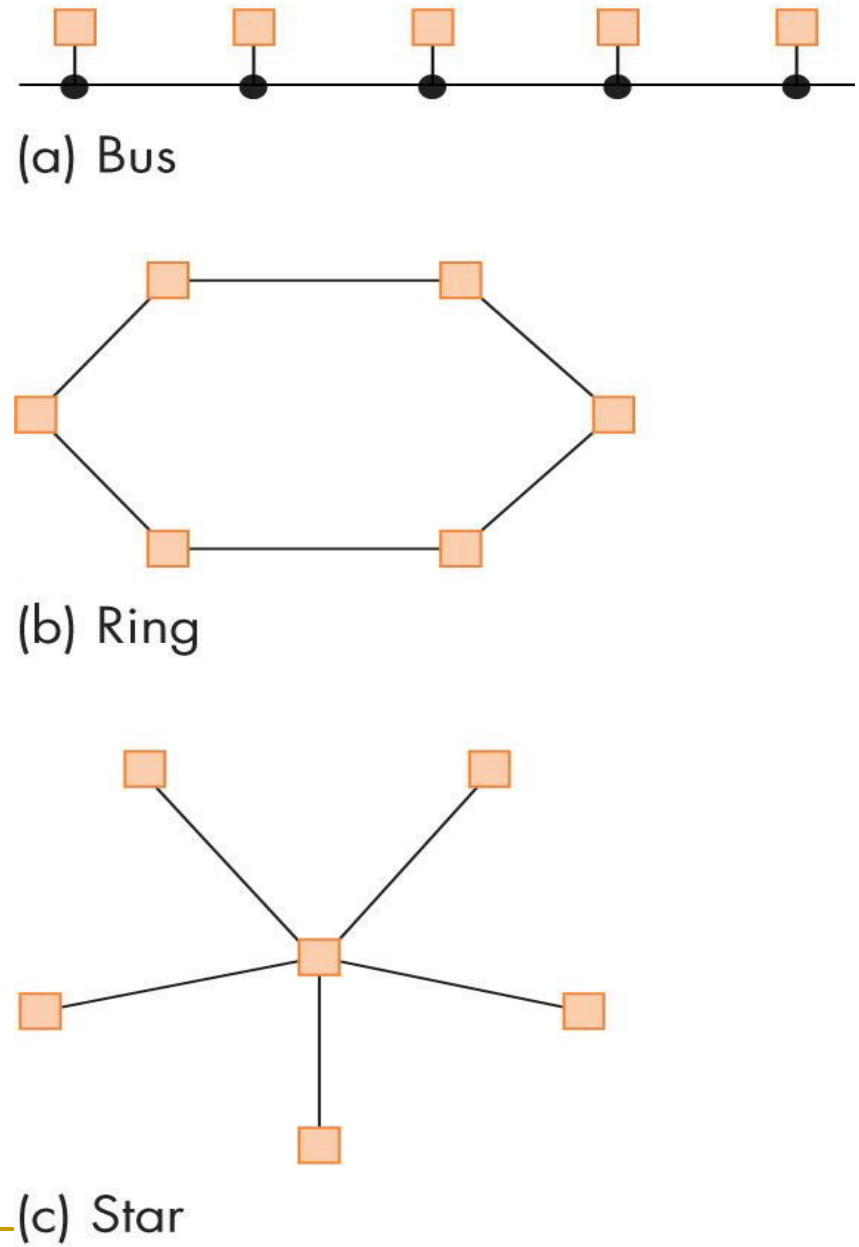

Local Area Networks (continued)

- Ethernet
  - Most widely used LAN technology
  - Uses the bus topology
  - Two ways to construct an Ethernet LAN
    - Shared cable
    - Hubs: The most widely used technology

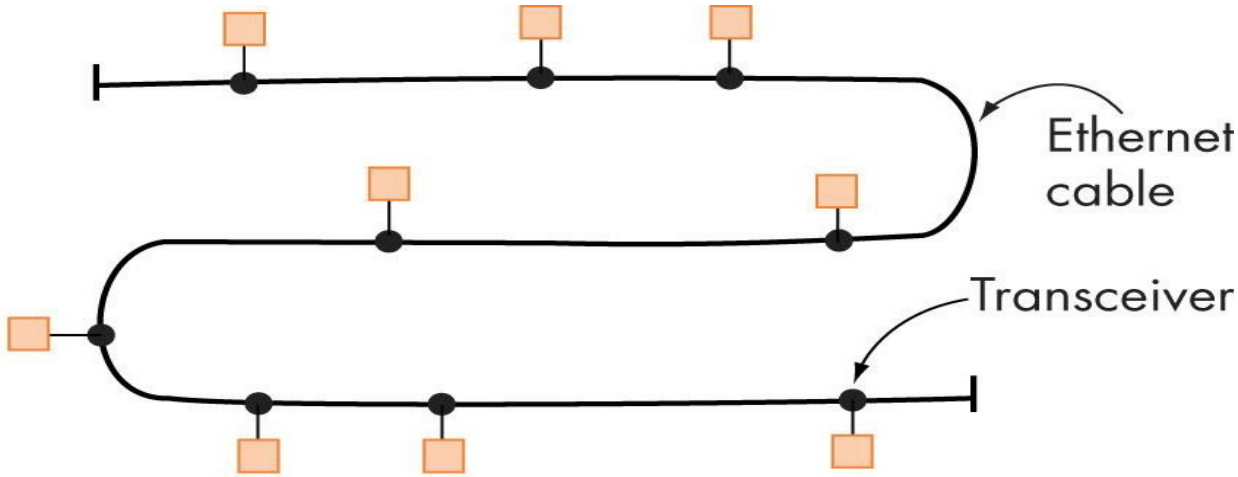

(a) Single Cable Configuration

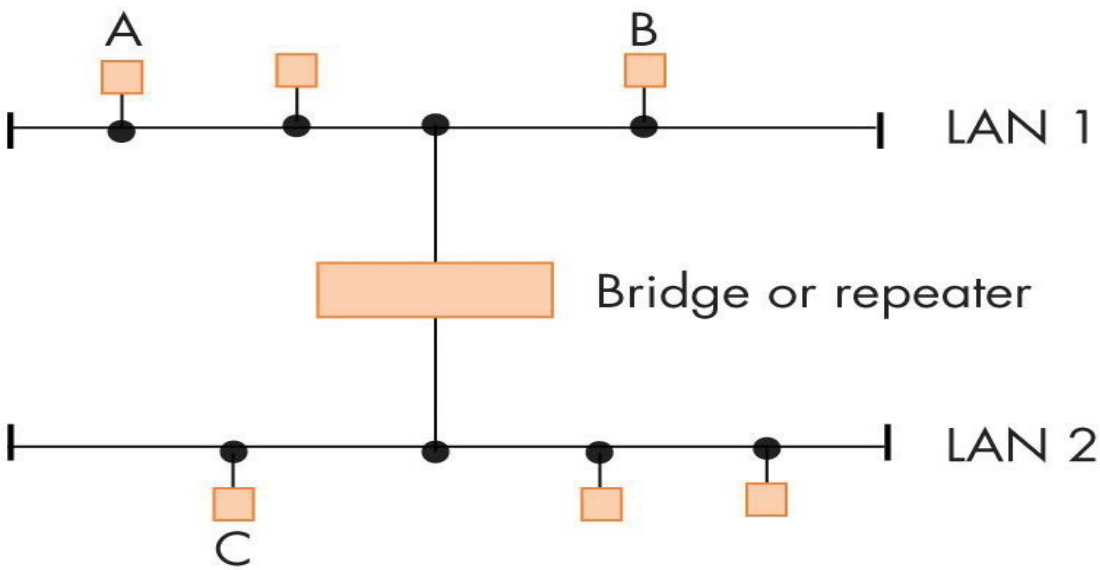

(b) Multiple Cable Configuration

Figure 7.5
An Ethernet LAN Implemented Using Shared Cables

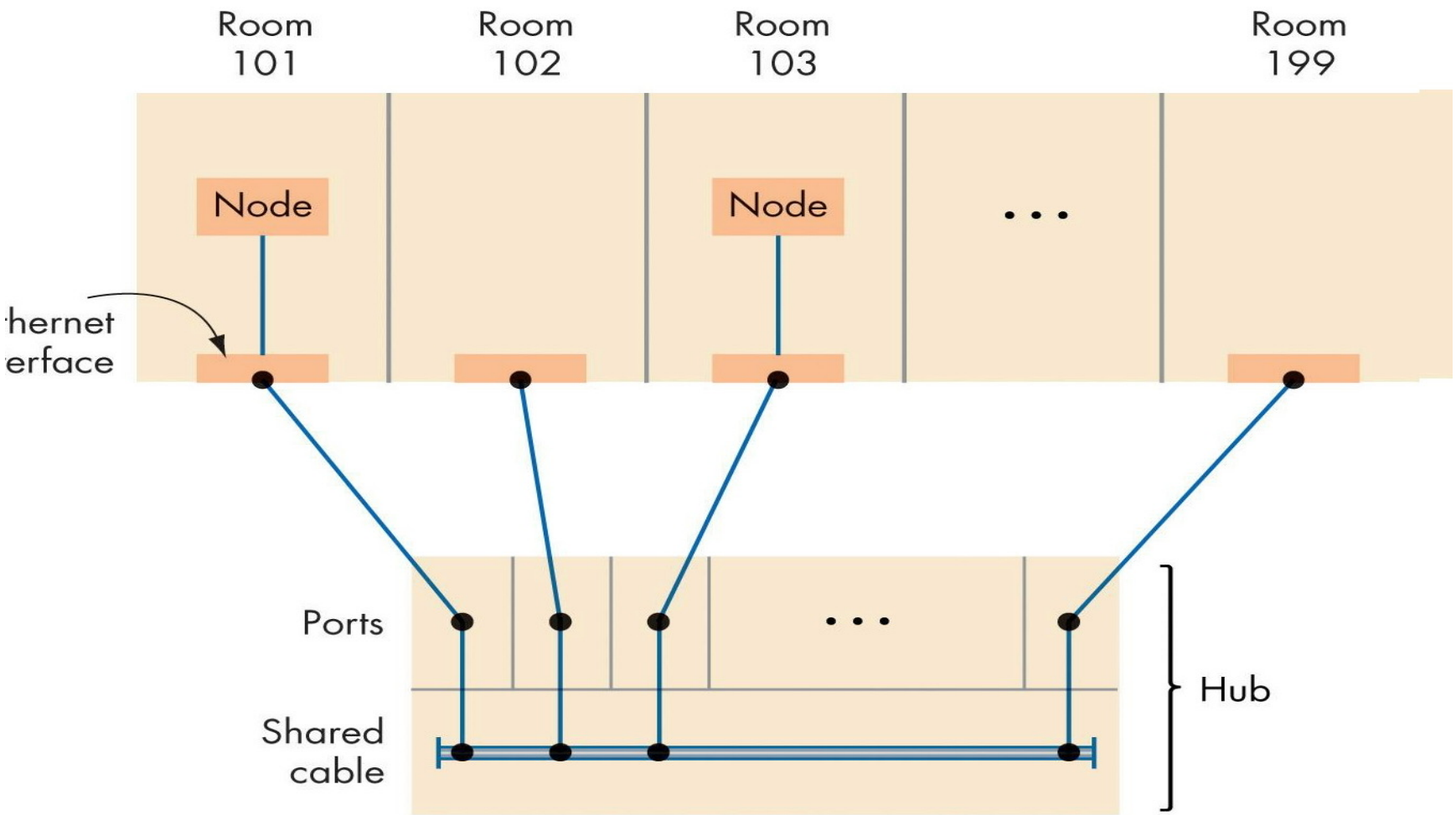

Figure 7.6

An Ethernet LAN Implemented Using a Hub

Wide Area Networks

- Wide area networks (WANs)
  - Connect devices that are across town, across the country, or across the ocean
  - Users must purchase telecommunications services from an external provider
  - Dedicated point-to-point lines
  - Most use a store-and-forward, packet-switched technology to deliver messages

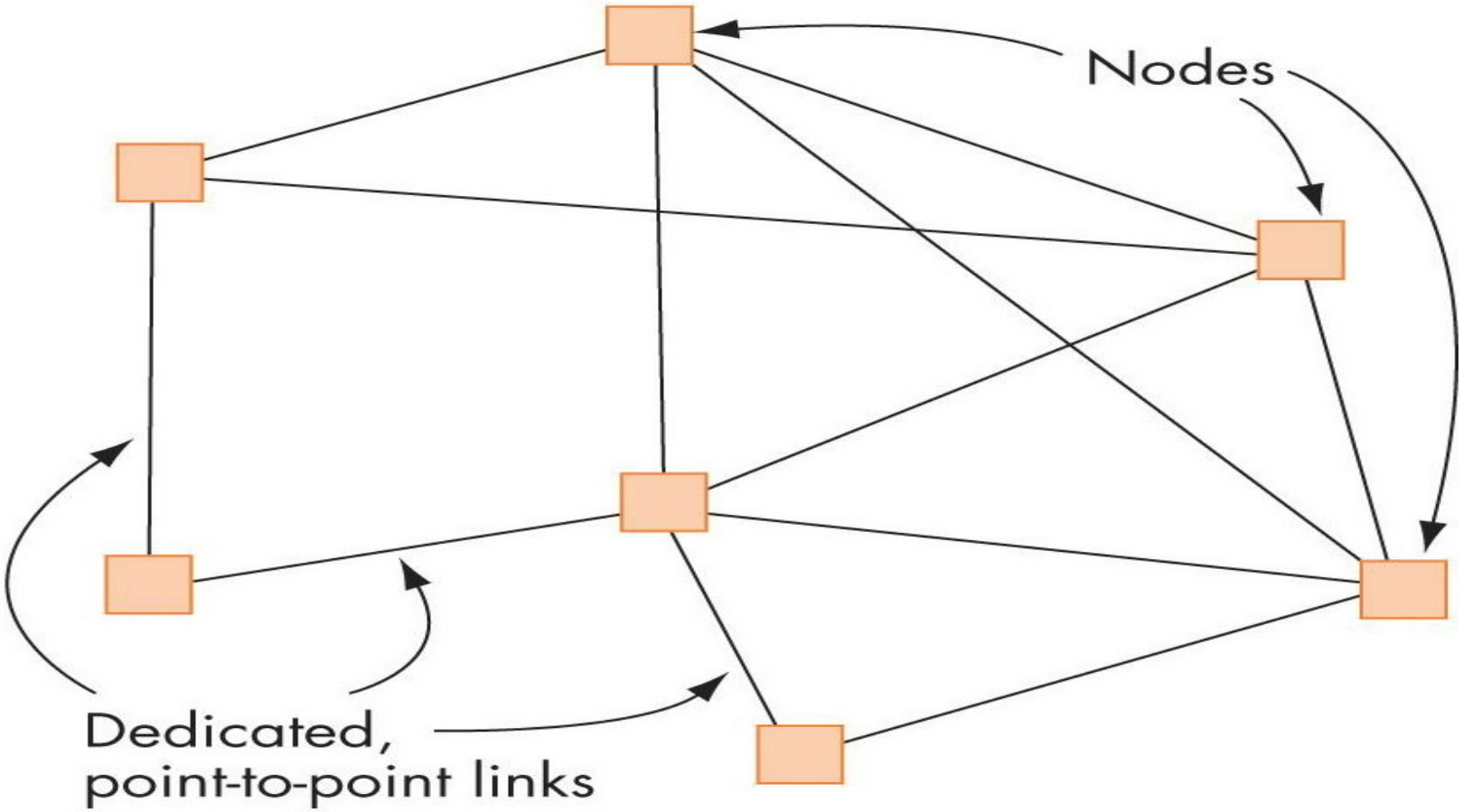

Figure 7.7

Typical Structure of a Wide Area Network

Overall Structure of the Internet

- All real-world networks, including the Internet, are a mix of LANs and WANs
  - Example: A company or a college
    - One or more LANs connecting its local computers
    - Individual LANs interconnected into a wide-area company network

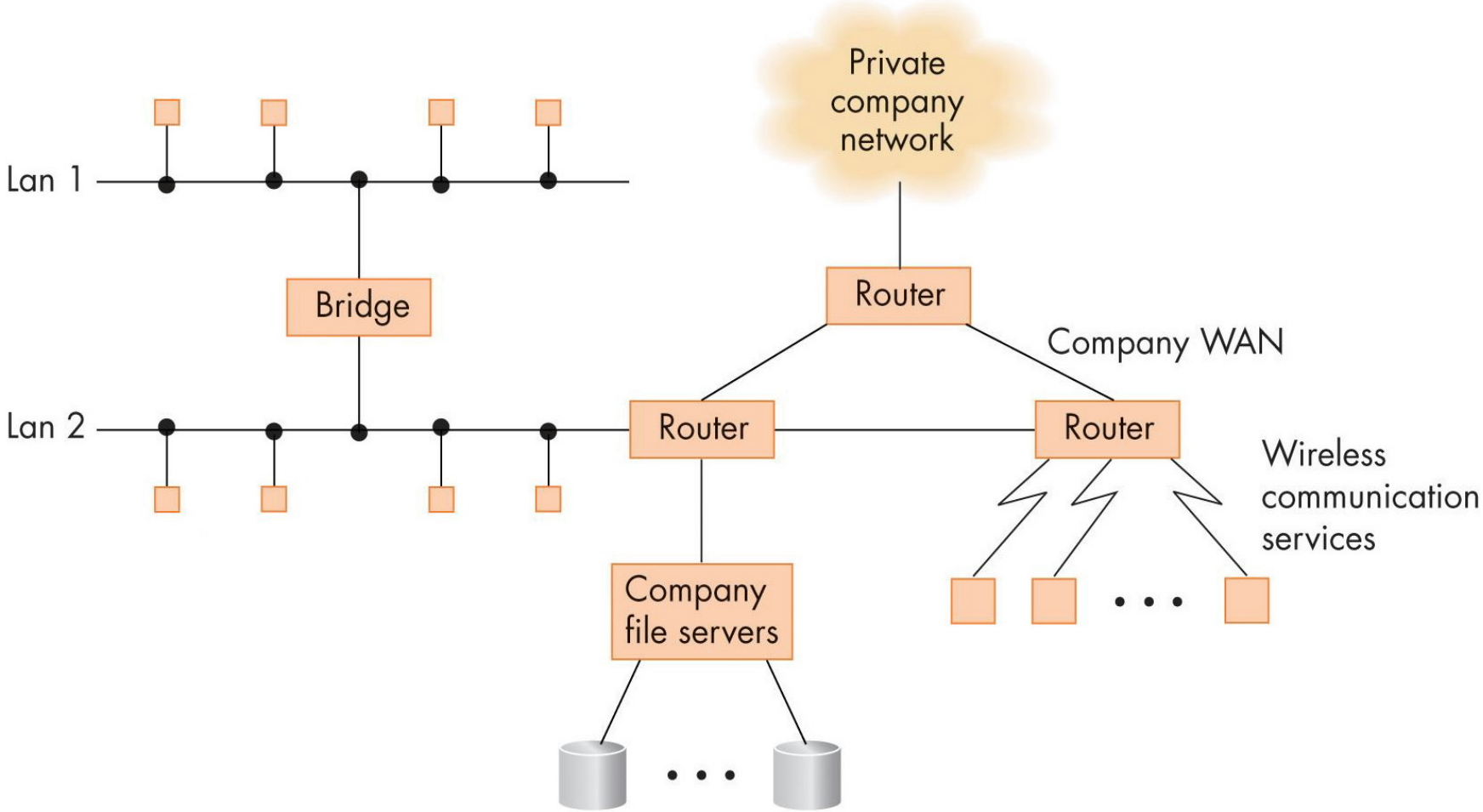

Figure 7.8 (a)

Structure of a Typical Company Network

Overall Structure of the Internet (cont'd)

- Internet Service Provider (ISP)
  - A wide-area network
  - Provides a pathway from a specific network to other networks, or from an individual's computer to other networks
- ISPs are hierarchical
  - Interconnect to each other in multiple layers to provide greater geographical coverage

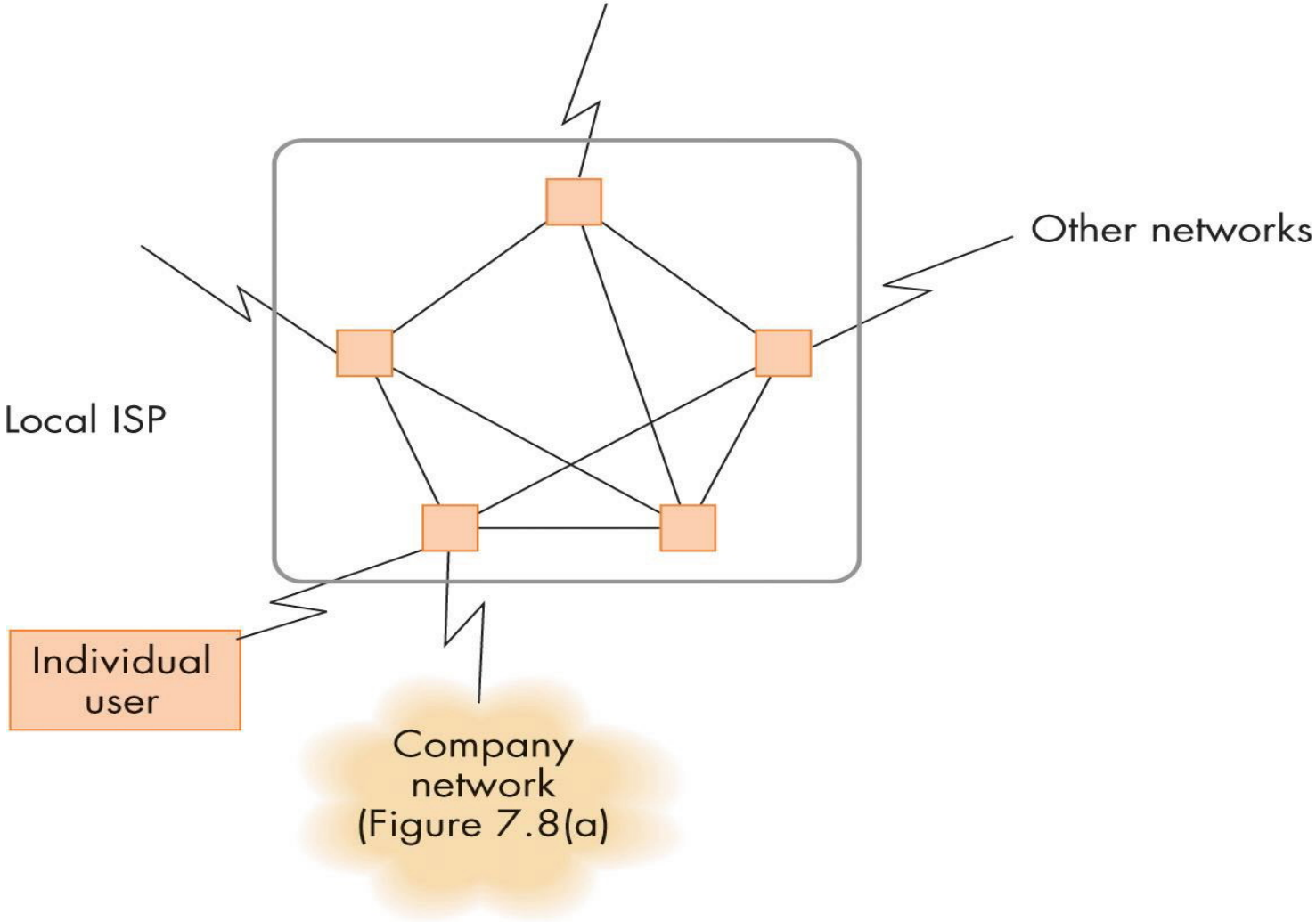

Figure 7.8(b)

Structure of a Network Using an ISP

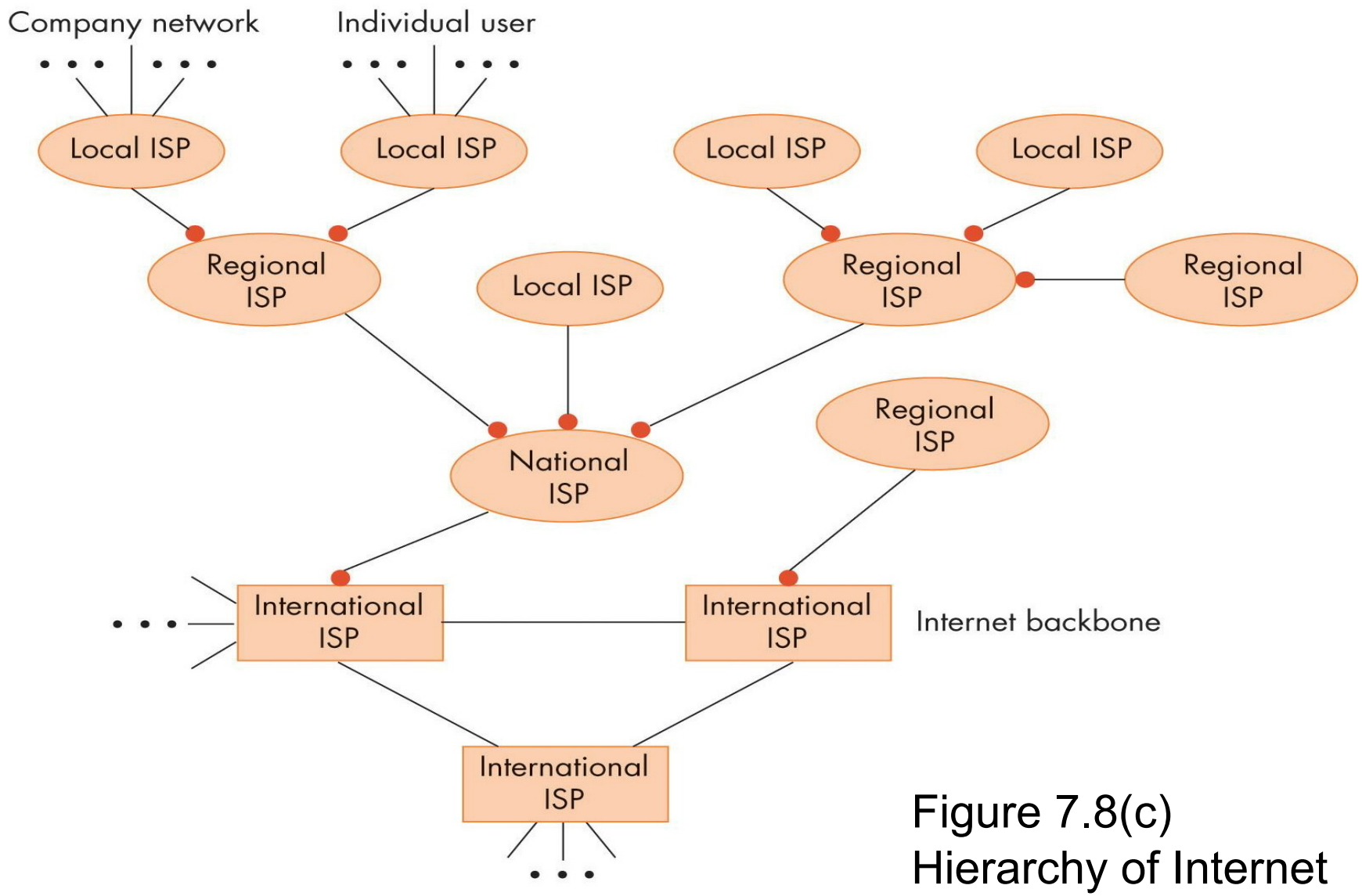

Figure 7.8(c)
Hierarchy of Internet Service Providers

Overall Structure of the Internet (cont'd)

- **Internet**
  - A huge interconnected "network of networks"
  - Includes nodes, LANs, WANs, bridges, routers, and multiple levels of ISPs
    - Early 2008:
      - 541 million nodes (hosts)
      - Hundreds of thousands of separate networks located in over 225 countries
    - 50 billion nodes were predicted for 2020

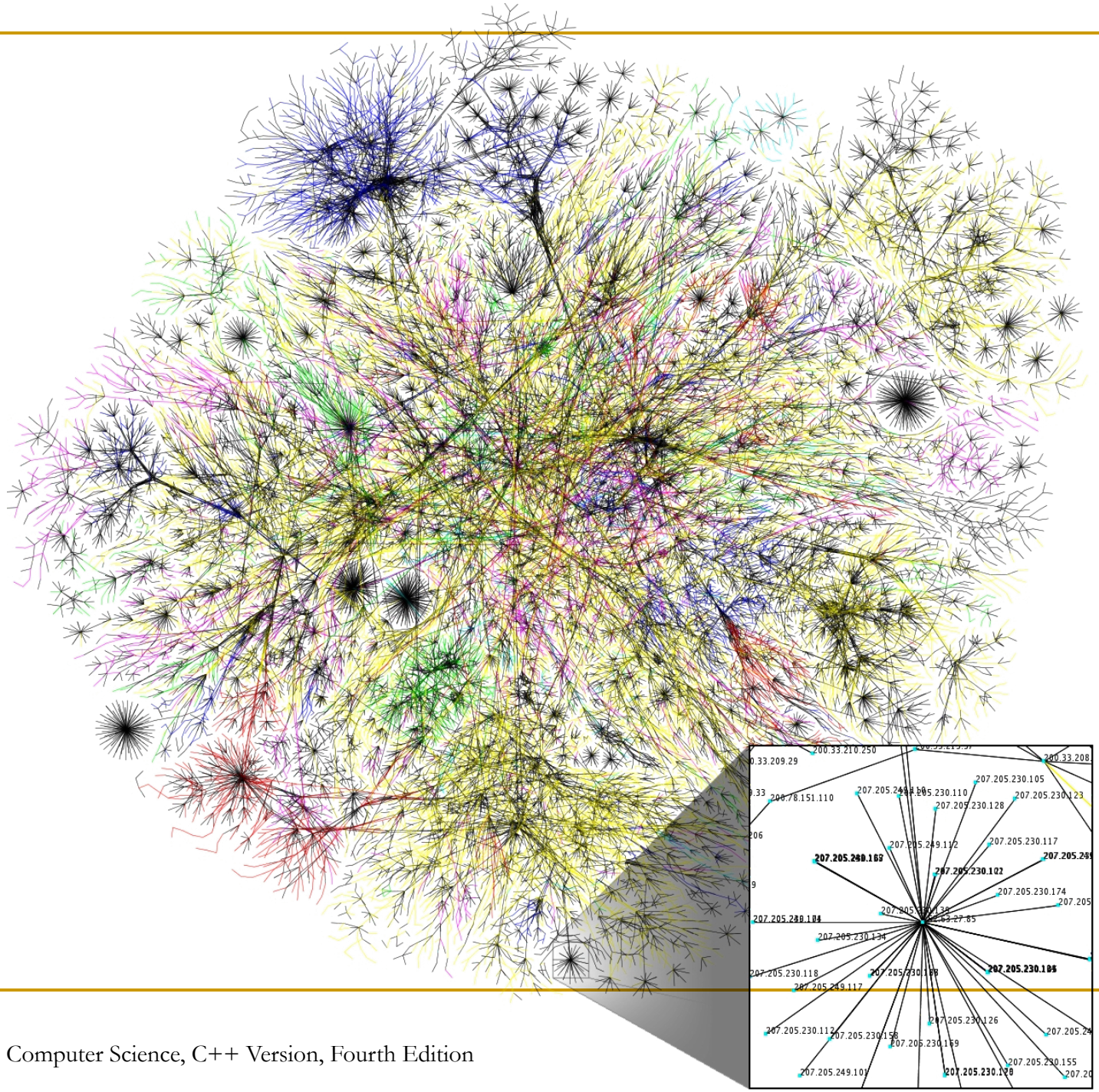
200.33.210.250
207.205.230.105
207.205.230.110
207.205.230.123
200.78.151.110
207.205.230.128
207.205.249.112
207.205.230.117
207.205.230.174
207.205.230.134
207.205.230.118
207.205.249.117
207.205.230.126
207.205.230.112
207.205.230.158
207.205.230.169
207.205.230.155
207.205.249.101

Communication Protocols

- A protocol
  - A mutually agreed upon set of rules, conventions, and agreements for the efficient and orderly exchange of information
- TCP/IP (Transport Control Protocol / Internet Protocol)
  - The Internet protocol hierarchy
  - Governs the operation of the Internet
  - Five layers

Layer	Name	Examples	
5	Application	HTTP, SMTP, FTP	
4	Transport	TCP, UDP	
3	Network	IP	
2b	Logical Link Control	PPP, Ethernet	Data Link Layer
2a	Medium Access Control	Ethernet	Data Link Layer
1	Physical	Modem, DSL, Cable Modem	

Figure 7.10

The Five-Layer TCP/IP Internet Protocol Hierarchy

OSI 7-Layer Model compared with TCP/IP 5-Layer Model

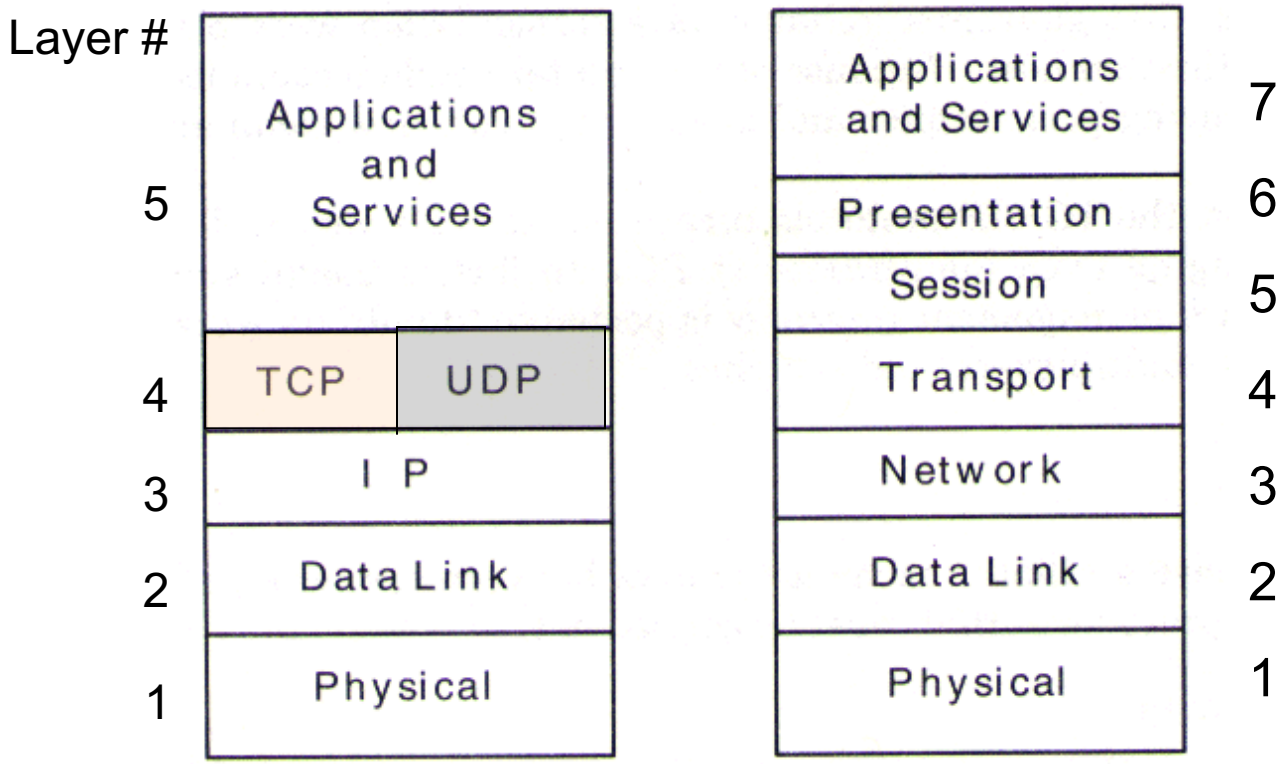

Physical Layer

- Protocols govern the exchange of binary digits across a physical communication channel
  - *How to detect when a bit is present on the line?*
  - *How long will that bit remain on the line?*
  - *Will the bit be in the form of an analog or digital signal?*
  - *What voltage levels used to represent a 0 and a 1?*
  - *What shape is the connector between the computer and the transmission line?*

- <u>Goal</u>: create a “bit pipe” between two computers

Data Link Layer

- Protocols carry out:
  - Error handling
  - Framing
- Creates an error-free message pipe
- Composed of two services
  - Layer 2a: Medium access control
  - Layer 2b: Logical link control

Data Link Layer (continued)

- Medium access control protocols
  - Determine how to arbitrate ownership of a shared line when multiple nodes want to send at the same time
- Logical link control protocols
  - Ensure that a message traveling across a channel from source to destination arrives correctly

Network Layer

- Delivers a message from the site where it was created to its ultimate destination
- Critical responsibilities:
  - Create a universal addressing scheme for all network nodes
  - Deliver messages between any two nodes in the network

Network Layer (continued)

- Provides a true "network delivery service"
  - Messages are delivered between any two nodes in the network, regardless of where they are located

- IP (Internet Protocol) layer
  - Network layer in the Internet
  - IP Address of www.cs.kent.edu (131.123.35.61)
    - In binary: 131 123 35 61
    - 10000011 01111011 00100011 00111101

Transport Layer

- Provides a high-quality, error-free, order-preserving, end-to-end delivery service
- TCP (Transport Control Protocol)
  - Primary transport protocol on the Internet
  - Requires the source and destination programs to initially establish a connection

FIGURE 7.14

Relationship between IP Addresses and Port Numbers

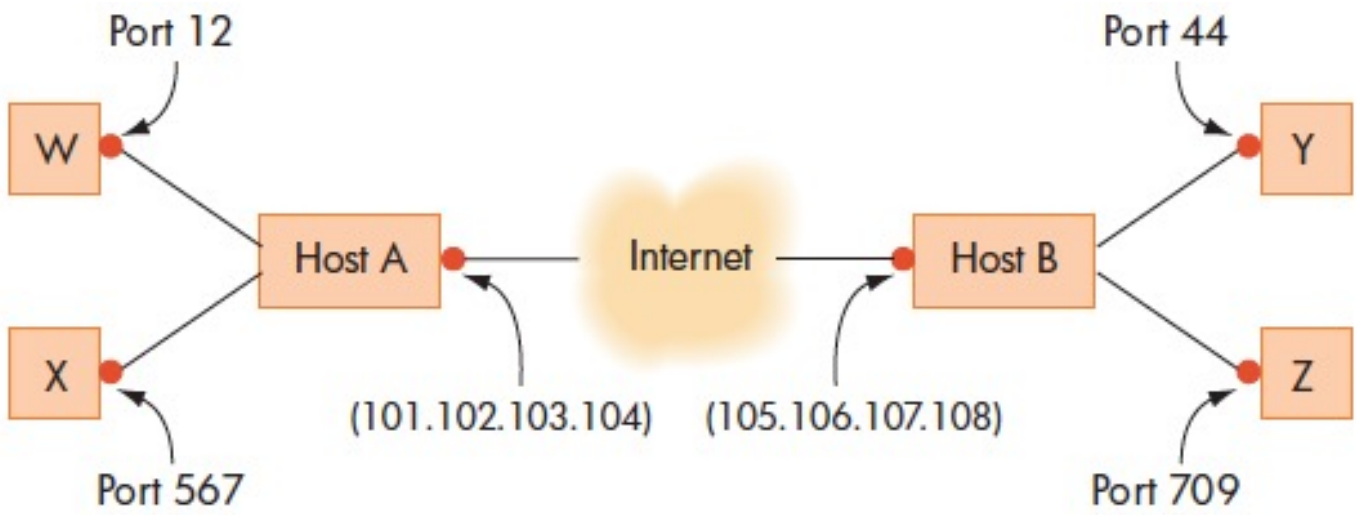

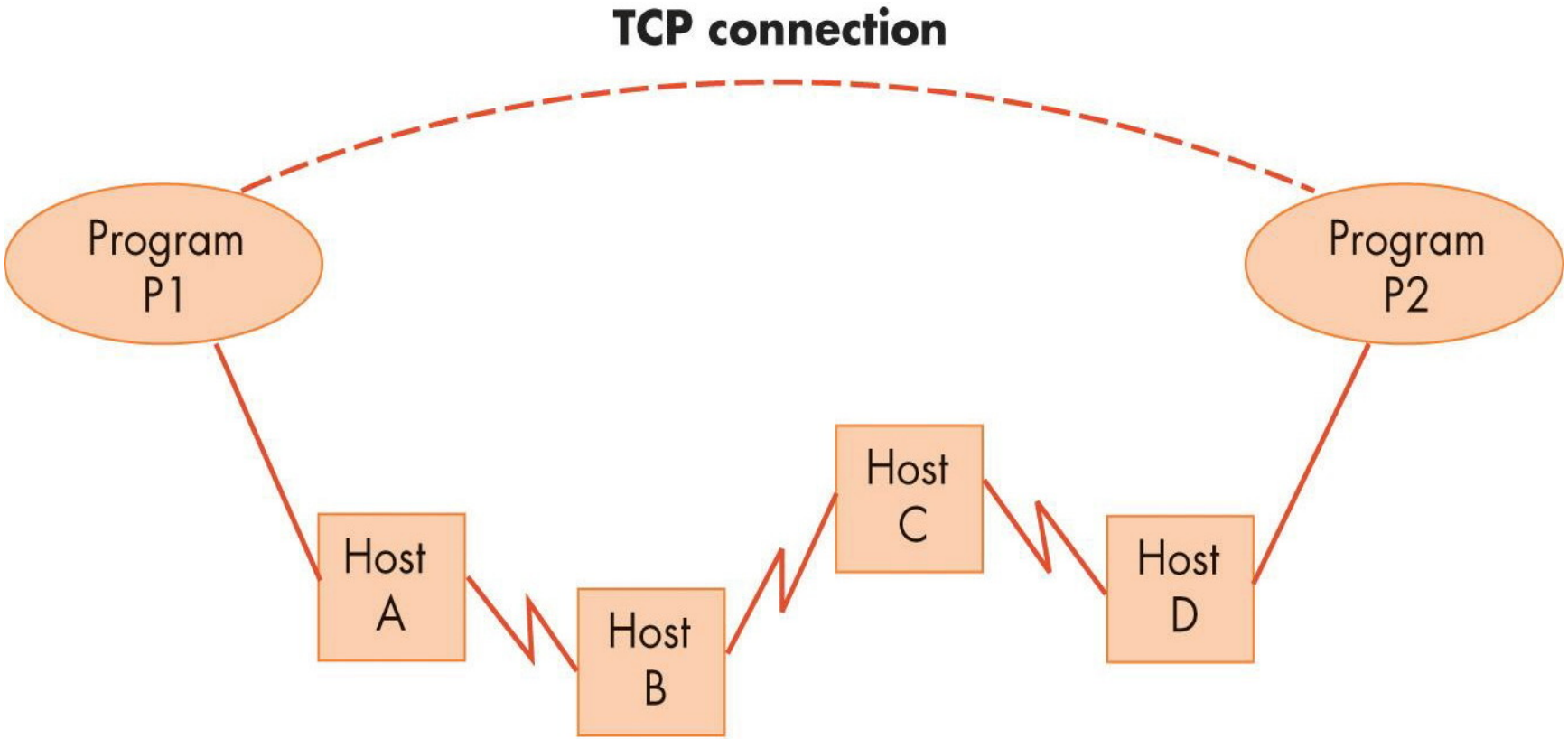

Figure 7.15
Logical View of a TCP Connection

Application Layer

- Implements the end-user services provided by a network
- There are many application protocols
  - **HTTP** (Hyper Text Transfer Protocol)
  - **SMTP** (Simple Mail Transfer Protocol)
  - **POP3** (Post Office Protocol 3)
  - **IMAP** (Internet Message Access Protocol)
  - **FTP** (File Transfer Protocol)

Acronym	Name	Application	Well-known Port
HTTP	Hypertext Transfer Protocol	Accessing web pages	80
SMTP	Simple Mail Transfer Protocol	Sending electronic mail	25
POP3	Post Office Protocol	Receiving electronic mail	110
IMAP	Internet Mail Access Protocol	Receiving electronic mail	143
FTP	File Transfer Protocol	Accessing remote files	21
TELNET	Terminal Emulation Protocol	Remote terminal access	23
DNS	Domain Name Service	Translating symbolic host names to 32-bit IP addresses	42

Figure 7.16

Some Popular Application Protocols on the Internet

Application Layer (continued)

- **Uniform Resource Locator (URL)**
  - A symbolic string that identifies a Web page
  - Form → protocol://host address/page
  - The most common Web page format is hypertext information
    - Accessed using the HTTP protocol (e.g., https://www.cs.hacettepe.edu.tr)

Application Layer (continued)

- Hypertext Transfer Protocol (HTTP)
  1. Establish a connection between client and server
  2. Request the web page (request message)
  3. Response status of request, if successful, the requested information (response message)

FIGURE 7.17

Behavior of the HTTP Application-Level Protocol

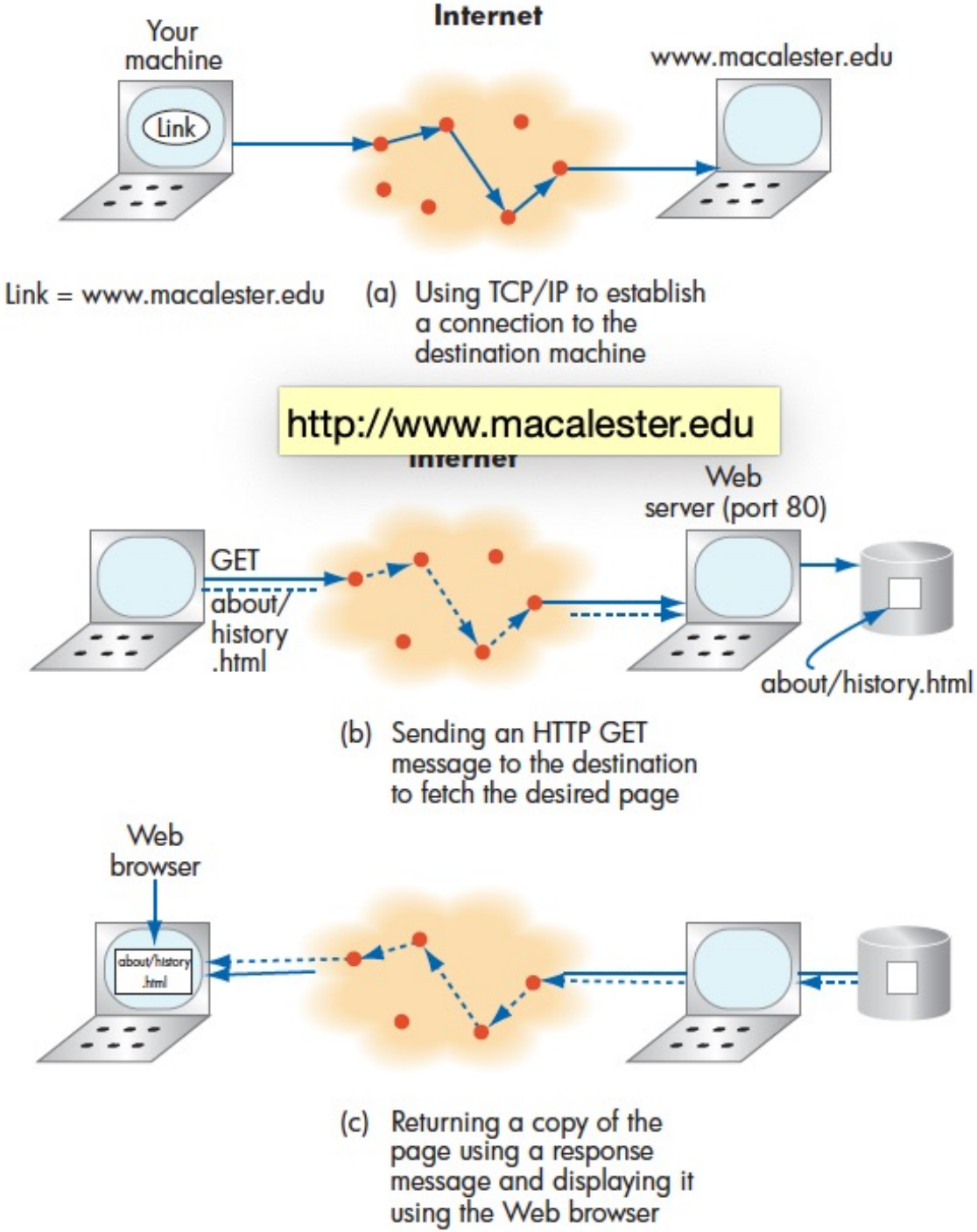

The Pieces Working Together

- Pieces working together
  1. Browser scans URL, extracts host name
  2. Browser asks TCP to establish connection on port 80
  3. Once TCP connection is established, browser constructs a GET message

```
GET /~ssteinfa/classes/intro.sp08/index.html HTTP /1.1
Host: www.cs.kent.edu
Accept-language: English
```

The Pieces Working Together (cont'd)

4. The GET message is transmitted across the Internet, received by Web server using TCP/IP stack

5. GET message is received, server locates page, creates HTTP response message with a "Found" message and page, closes TCP connection once page is sent.

6. HTTP response message is transmitted across the Internet

7. Message delivered to your machine, page is displayed. TCP connection is terminated.

Network Services and Benefits

- Services offered by computer networks
  - Electronic mail (email)
  - Bulletin boards
  - News groups
  - Chat rooms
  - Resource sharing
    - Physical resources
    - Logical resources

Network Services and Benefits (continued)

- Services offered by computer networks
  - Client-server computing
  - Information sharing
  - Information utility
  - Electronic commerce (e-commerce)

A Brief History of the Internet and the World Wide Web: The Internet

- August 1962: First proposal for building a computer network
  - Made by J. C. R. Licklider of MIT
- ARPANET
  - Built by the Advanced Research Projects Agency (ARPA) in the 1960s
  - Grew quickly during the early 1970s

The Internet (continued)

- NSFNet: A national network built by the National Science Foundation (NSF)
- October 24, 1995: Formal acceptance of the term *Internet*
- Internet service providers started offering Internet access, once provided by the ARPANET and NSFNet

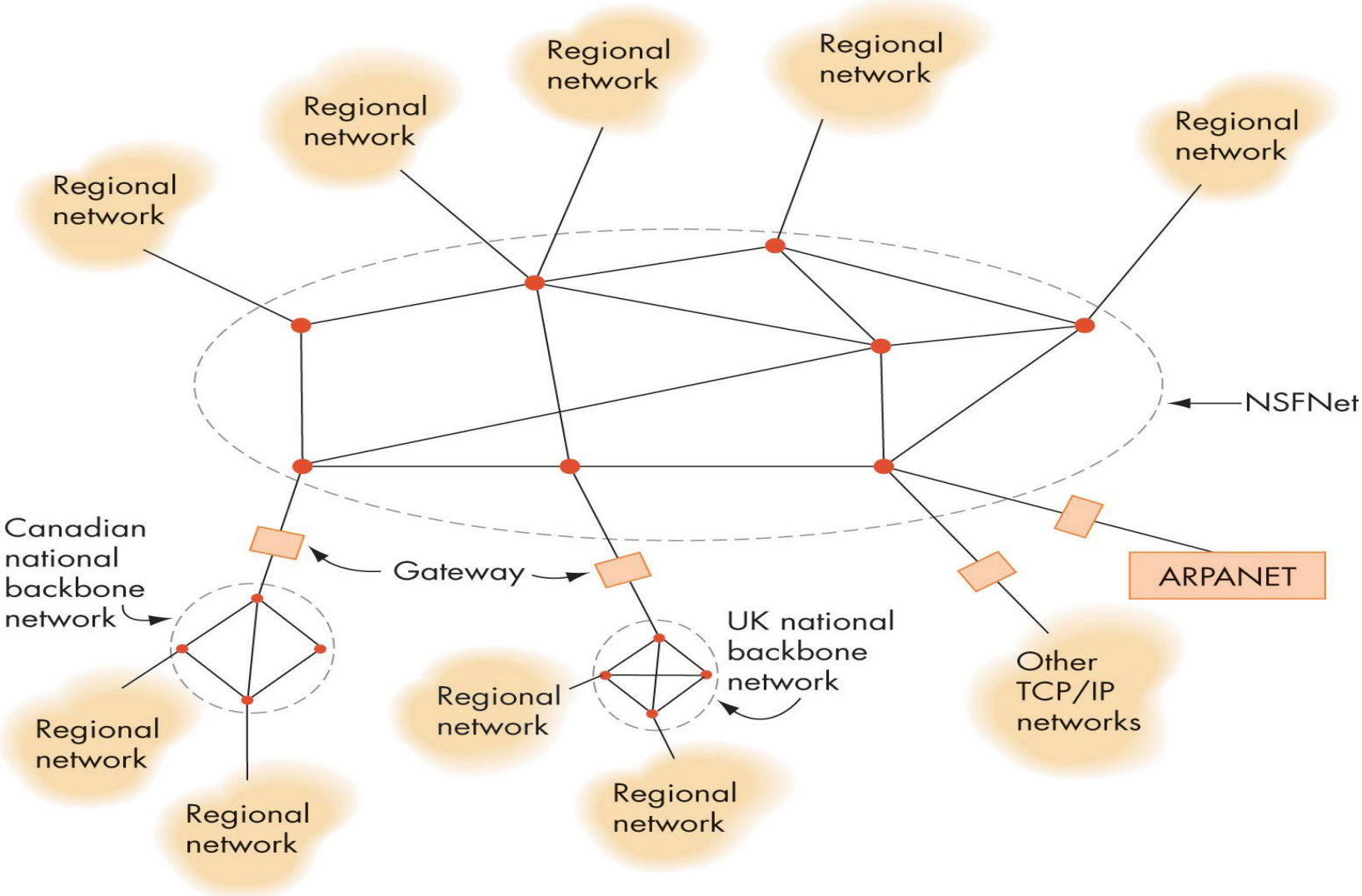

Figure 7.20
State of Networking in the Late 1980s

The World Wide Web

- Development completed in May 1991
- Designed and built by Tim Berners-Lee
- Components
  - Hypertext
    - A collection of documents interconnected by pointers called links
  - URL (Uniform Resource Locator)
    - The worldwide identification of a Web page located on a specific host computer

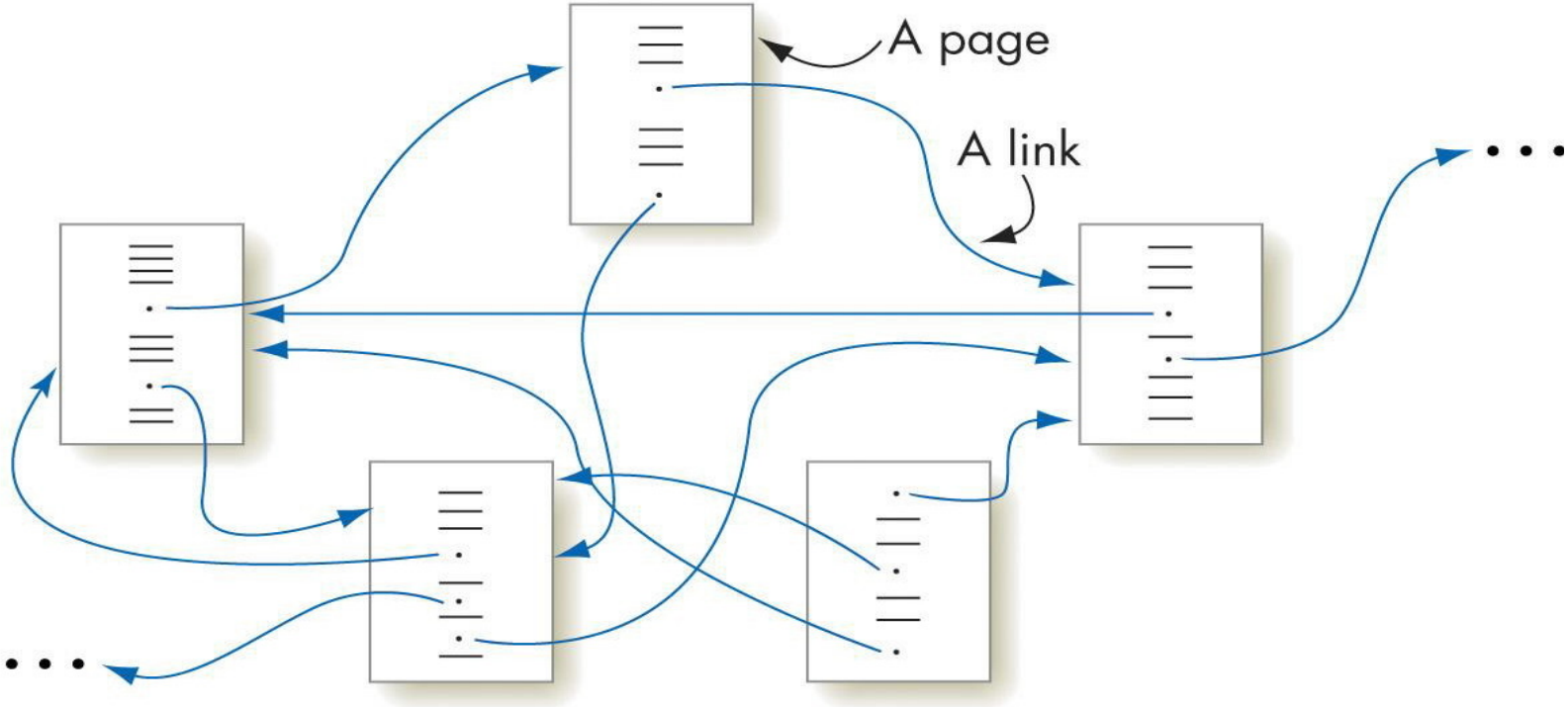

Figure 7.21
Hypertext Documents

Summary

- Computer network: A set of independent computer systems connected by telecommunication links
- Options for transmitting data on a network: Dial-up telephone lines, Digital subscriber line (DSL), cable modem, Ethernet, Fast Ethernet
- Types of networks: Local area network (LAN) and Wide area network (WAN)

Summary (continued)

- The Internet is a huge interconnected "network of networks"
- TCP/IP is the Internet protocol hierarchy, composed of five layers: physical, data link, network, transport, and application
- The World Wide Web is an information system based on the concept of hypertext